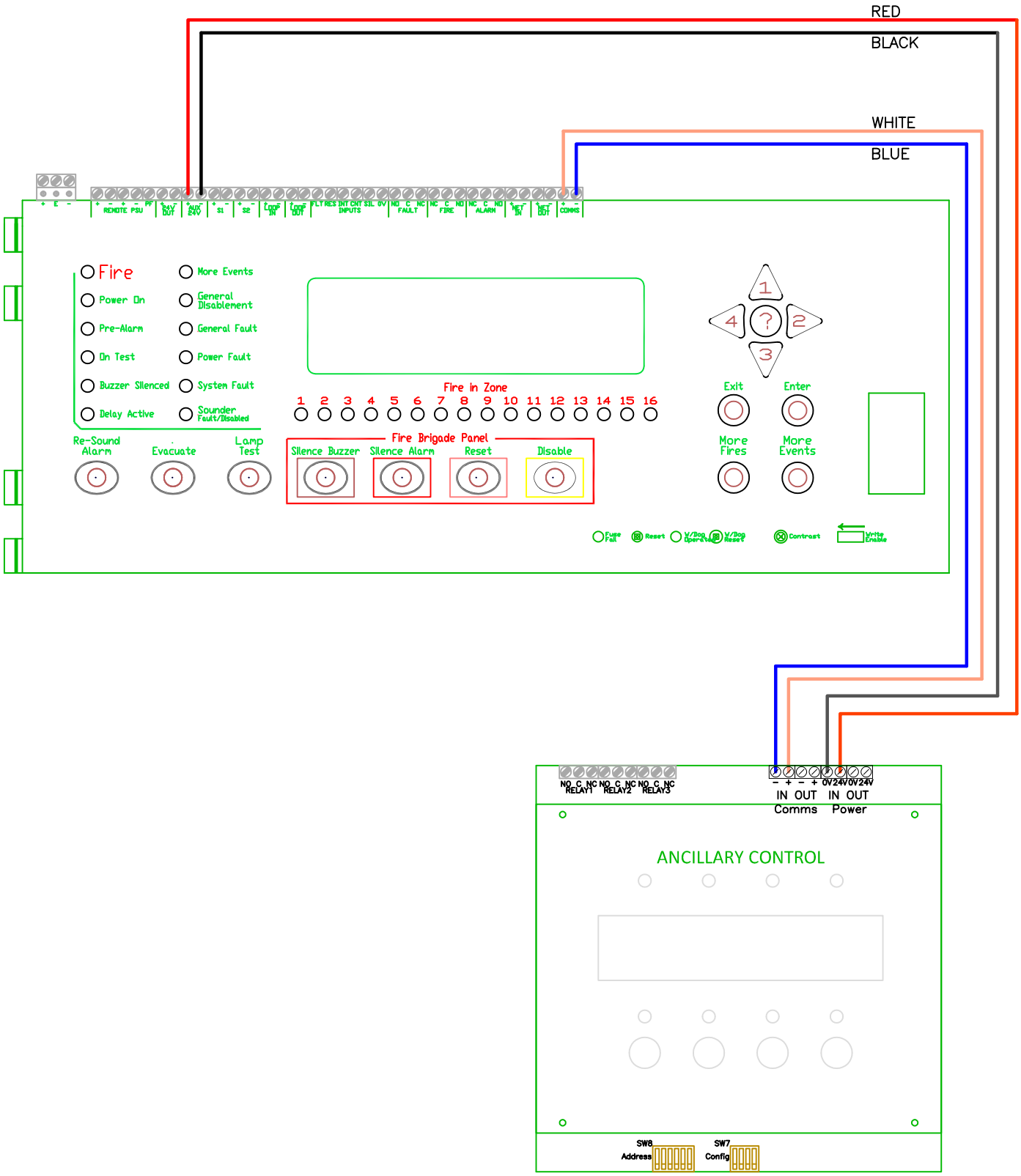


| | | | | | | | | |
|---|---|---|---|---|---|---|---|---|
| 1 / 1 | NTS | TYP2020_003 | JC | 25/06/2020 | TYPICAL | incite fire | Project / Title/ Name | TYPICAL DRAWING<br>ANCILLARY CONTROLLER<br>SYNCRO-KAU2017<br>CONNECTION WIRING |
| SHEET | SCALE | DWG No. | Designed by / Checked by | DWG DATE / APPROVED DATE | Article No. / Reference | | | |

incite fire
Block Y, Unit 1, 391 Park Road
Regengents Park NSW 2143
P+61 2 9644 71 44
F +61 2 9644 7255

| NO. | DATE | REVISION |
|---|---|---|
| | | |
| | | |
| | | |
| | | |
| | | |
| | | |